Rocket City Space Pioneers
X Prize Test Bed

Team Lead

Evan Helmeid — Purdue University
Allen Bordelon — Louisiana State University
Peter Davison — Princeton University
Timothy Holland — University of North Dakota
Joshua Hooks — University of Washington

Abstract

The Rocket City Space Pioneers is a team of companies formed with the goal of sending a robotic lander to the moon and deploying a rover to traverse the lunar surface to compete for the Google Lunar X Prize. We have designed an X Prize Test Bed to test the technologies used on the lunar lander design and verify the integration of the subsystems. The modular test bed provides long-duration flight in a lunar gravity-simulated environment with three degrees of freedom while introducing minimal external force. The primary subsystems to be tested include propulsion, GNC, and structures, as well as subsystem integration.

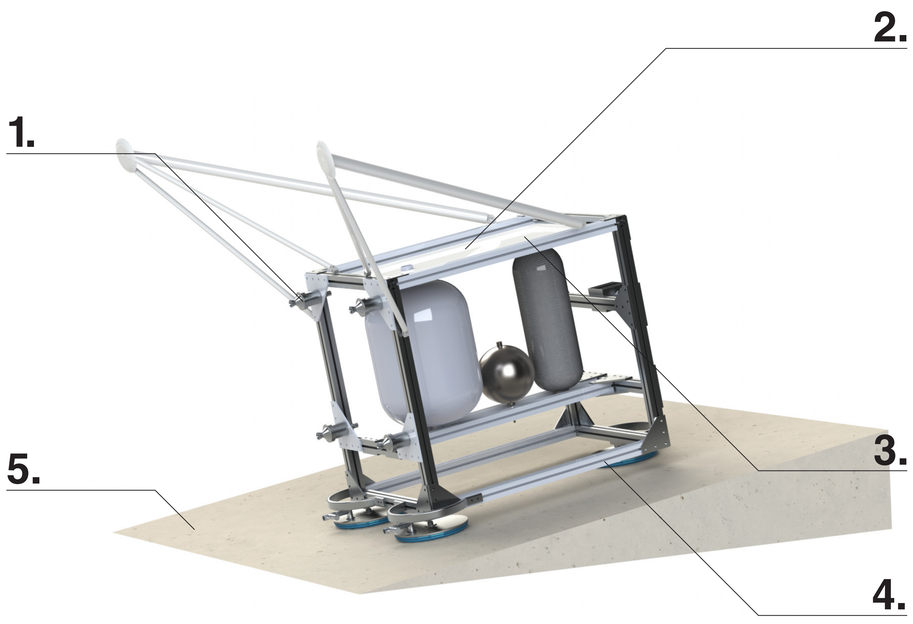

Figure 1: X Prize Test Bed concept with primary sub-systems

Conclusions & Results

The platform provides sufficient capability to test GNC algorithms, propulsion subsystem performance, structures effectiveness, and subsystem integration in a simulated lunar gravity environment.

Total vehicle mass:	210 kg (wet), 180 kg (dry)
Total vehicle power:	345 watts
Total system cost:	$150,000
Target completion date:	February 2012

Requirements

- Medium-fidelity test bed to test subsystems integration in simulated lunar gravity
- Provide long-duration testing
- Be able to test propulsion system
- Be able to test landing gear
- Be able to test GNC algorithms and obstacle avoidance

1. Propulsion

Peroxide/kerosene bi-prop system with the capability of running as a peroxide mono-prop.

Main thrusters:	4x 110lbf hydrogen peroxide/kerosene
Under development by Dynetics	
ACS thrusters:	2x 10lbf hydrogen peroxide
Flight time:	60 seconds
Total dV:	1470 ft/s

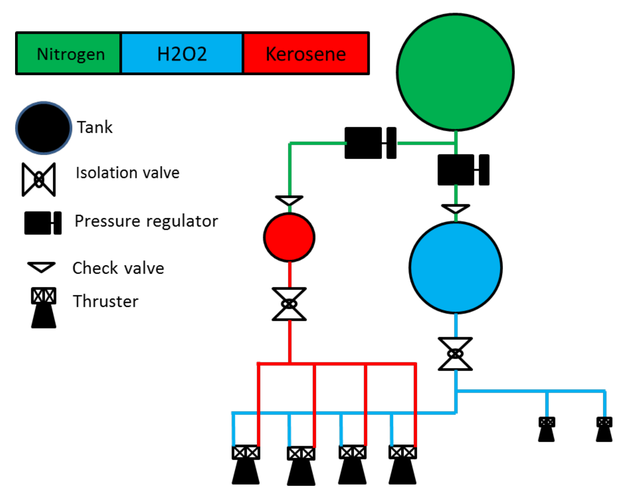

Figure 2: Simplified Propulsion Sub-System Schematic

2. Electronics

Computer: FPGA + Processor Core executes GNC algorithms, communication and power distribution
Valve Controller: Array of solid state relays and ports for solenoid valves, controlled by data line from Flight Computer
Comm: Wi-Fi connection for telemetry and command
Power supply: Rechargeable Li-Ion, 24 V Bus

3. Guidance, Navigation, & Control

- 3 x Laser Distance Sensor: 2 altitude, 1 cross-range
- 2 x Digital Camera: vision-based navigation for landing
- **IMU:** acceleration and attitude sensing
- **Algorithms:** Developed by Draper Laboratory for autonomous robotic lunar landers

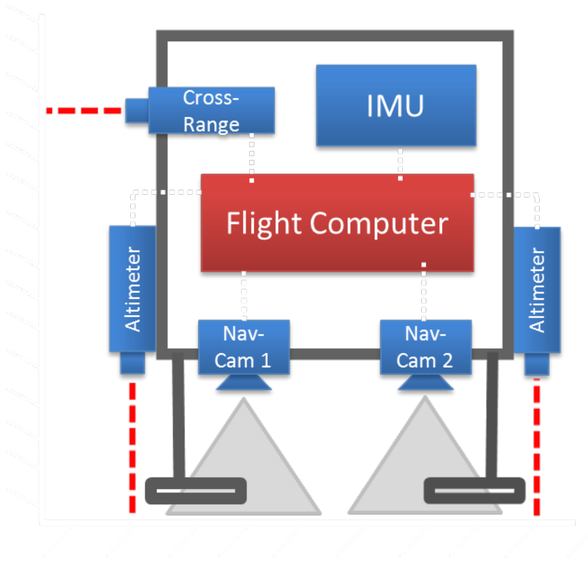

Figure 3: Component Overview of Guidance, Navigation, and Control Sub-System

4. Vehicle

- 3x air bearings, providing negligible friction with plane
- Air bladder bearings allow for floor imperfections
- 135 seconds of support with on-board pressurized air
- Frame of extruded 6063-T4 aluminum
- Modular components, easy to reconfigure, almost entirely COTS parts
- Electronics mounted on PVC sheets

5. Plane

- 10m in simulated altitude, 5m in simulated cross-range
- Wedge slab of regular concrete
- Surfaced with high-strength, temperature-resistant concrete
- Smooth to 0.25cm over 9 square meters
- Vehicle lands on simulated lunar surface

Dynetics

Research Advisor — Andy Crocker — Dynetics Inc.